TARON

SOB750v0865

TECHNICAL DOCUMENT- LIGHT SOURCE

Supplier's name or trade mark:	MEGAMAN GmbH
Supplier's address	Halskestraße 22-26, AircomParc A140880 RatingenGermany
Model identifier	SOB750v0865
Equivalent Models	N/A
Technical Document	
Useful luminous flux	2290
On-mode Power (Pon)	15.2 W
Beam angle in degrees for directional light sources (DLS)	N/A
Peak luminous intensity in cd for directional light sources (DLS)	N/A
Correlated Colour Temperature	6500 K
Chromaticity coordinates (x,y)	0.313, 0.33
Colour Rendering Index (CRI)	Ra 80
Standby Power (Psb)	N/A
Networked Standby Power (Pnet)	N/A
R9 colour rendering index value for LED and OLED light sources	0
Survival factor for LED and OLED light sources	0.90
Lumen maintenance factor for LED and OLED light sources	0.98
Indicative lifetime L70B50 for LED and OLED light sources	50000
Displacement Factor (cos φ1)	0.9
Colour Consistency	SDCM ≤ 6
Luminance for HLLS	N/A
Flicker metric (PstLM)	1
Stroboscopic effect metric (SVM)	0.4
Excitation purity for CTLS	N/A
Weighted Energy Consumption	16 kWh/1000hrs
Energy Efficiency Class	D
Outer dimensions in mm	
Height	7.5
Width	15
Depth	327.6
Standards Compliance	CE, RoHS

CALCULATIONS - GENERAL RULE

Refer to Annex II of Energy Labelling (EU) 2019/2015

Energy efficiency classes and calculation method

The energy efficiency class of light sources shall be determined as set out in Table 1, on the basis of the total mains efficacy η_{TM}, which is calculated by dividing the declared useful luminous flux Φ_{use} (expressed in *lm*) by the declared on-mode power consumption P_{on} (expressed in *W*) and multiplying by the applicable factor FTM of Table 2, as follows:

$$\eta TM = (\Phi use/Pon) \times FTM\ (lm/W)$$

Table 1

Energy efficiency classes of light sources

Energy efficiency class	Total mains efficacy ηTM (lm/W)
A	210 ≤ ηTM
B	185 ≤ ηTM < 210
C	160 ≤ ηTM < 185
D	135 ≤ ηTM < 160
E	110 ≤ ηTM < 135
F	85 ≤ ηTM < 110
G	ηTM < 85

Table 2

Factors FTM by light source type

Light source type	Factor FTM

Non-directional (NDLS) operating on mains (MLS)	1,000
Non-directional (NDLS) not operating on mains (NMLS)	0,926
Directional (DLS) operating on mains (MLS)	1,176
Directional (DLS) not operating on mains (NMLS)	1,089

ADDITIONAL PART

A list of compatible dimmers shall be provided on the website www.megaman.cc

MEGAMAN | WEEE - Green Room | LED, Energy-efficient & Eco-friendly Lighting, Restriction of Hazardous Substances

https://www.megaman.cc/resources/green-room/weee

MEGAMAN GmbH
Halskestraße 22-26, AircomParc A1
40880 Ratingen
Germany

 Version 1.2021

Applicable Light Source Model Identifier	**Applicable Containing Product Model Number**	Light source Rated Voltage (V)	Light source Input Current (mA)
SOB750v0840	FOB75000v0 4000K	DC 400	38
SOB750v0865	FOB75000v0 6500K	DC 400	38
SOB751v0ds840	FOB75100v0-ds 4000K	DC 400	75
SOB751v0ds865	FOB75100v0-ds 6500K	DC 400	75
SOB752v0ds840	FOB75200v0-ds 4000K	DC 400	115
SOB752v0ds865	FOB75200v0-ds 6500K	DC 400	115

Light source: Removable

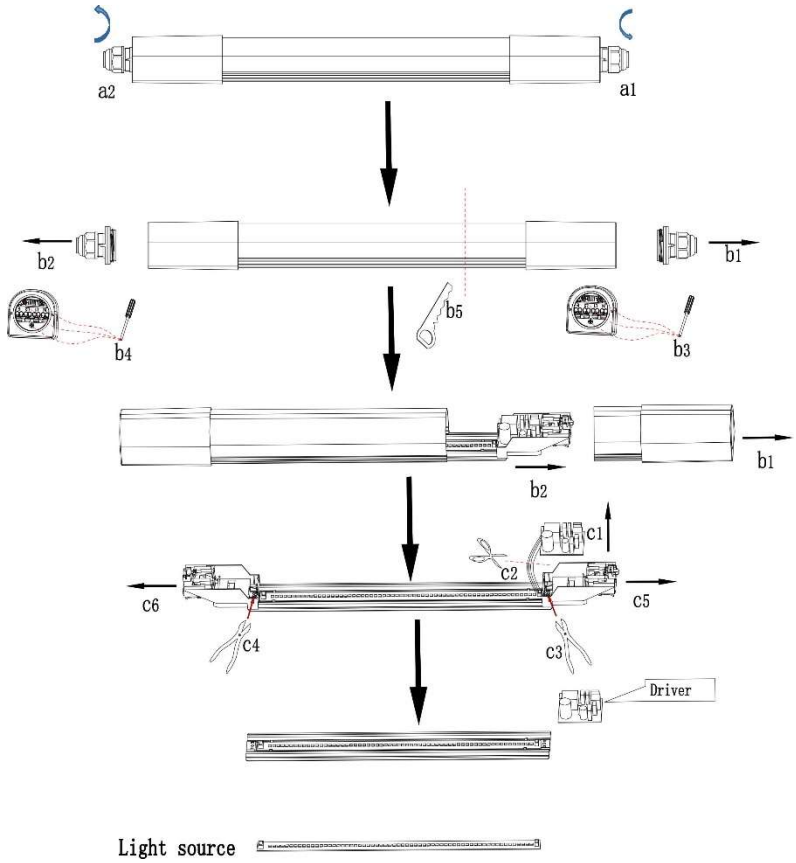

Version:A_V1.0
Date:2021/9/11